AFCO Millwork Products
11000 Green Valley Dr.
Olive Branch, MS 38654

ALUMINUM "T" ASTRAGAL
INSWING / OUTSWING
"IMPACT"

LYNDON F. SCHMIDT
LICENSE
No. 43409
STATE OF FLORIDA
PROFESSIONAL ENGINEER

Digitally signed by Lyndon F Schmidt
Date: 2024.07.17 16:34:38 -04'00'

This item has been digitally signed and sealed by **L. F. Schmidt, P.E.** on the date adjacent to the seal.

Printed copies of this document are not considered signed and sealed and the signature must be verified on any electronic copies.

THIS PRODUCT APPROVAL IS VALID ONLY FOR THE STATE OF FLORIDA

GENERAL NOTES

1. This product has been evaluated and is in compliance with the 8th Edition (2023) Florida Building Code (FBC) structural requirements excluding the "High Velocity Hurricane Zone" (HVHZ).
2. Product anchors shall be as listed and spaced as shown on details. Anchor embedment to base material shall be beyond wall dressing or stucco.
3. When used in areas requiring wind borne debris protection, this product complies with FBC Sections 1609.1.2 & R301.2.1.2 and does not require an impact resistant covering. This product meets missile level "D" and includes Wind Zone 4 as defined in ASTM E 1996 and FBC Sections 1609.1.2.2 & R301.2.1.2.1.
4. This product has been tested in the door panels as specified in this approval. Substitution into a similar product may be approved for use by the local Authority Having Jurisdiction. In all cases, the door used must possess a comparable current Florida Statewide product approval. The door panel size and design pressure (DP) rating shall not exceed the sizes and DP ratings shown in this approval or the steel side hinged swing door approval being used.
5. Site conditions that deviate from the details of this drawing require further engineering analysis by a licensed engineer or registered architect.

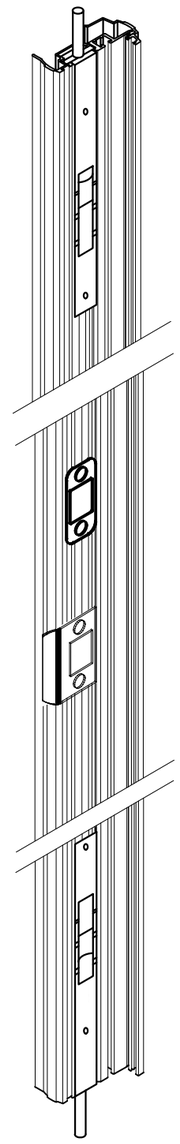

ALUMINUM "T" ASTRAGAL

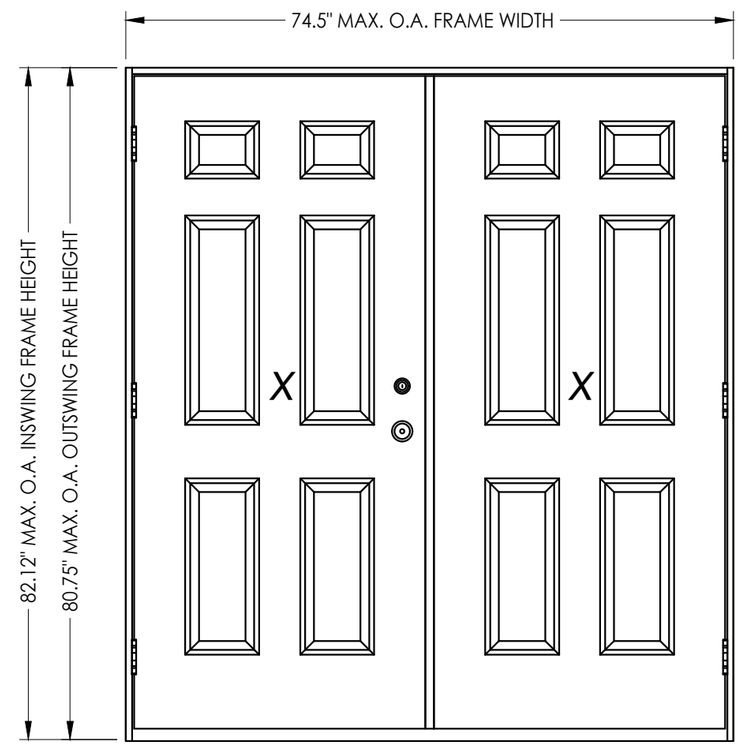

DOUBLE DOOR ELEVATION

ALUMINUM "T" ASTRAGAL by AFCO					
DOOR PANEL	MAX. FRAME DIMENSION	DESIGN PRESSURE (PSF) INSWING		DESIGN PRESSURE (PSF) OUTSWING	
		POSITIVE	NEGATIVE	POSITIVE	NEGATIVE
THERMA-TRU STEEL	74.5" X 82.12"	+50.0	-55.0	+50.0	-50.0
PLASTPRO FIBERGLASS	74.5" X 82.12"	+55.0	-60.0	+60.0	-60.0

TABLE OF CONTENTS

SHEET #	DESCRIPTION
1	Typical elevations, design pressures and general notes
2	Door panel details
3	Horizontal and vertical cross sections
4	Astragal details
5	Buck and frame anchoring
6	Bill of materials and components

Documents Prepared By:
Lyndon F. Schmidt
P.E. No. 43409
RW BUILDING CONSULTANTS, INC.
P.O. Box 230, Valrico, FL 33595
Phone No.: 813.659.9197
FBPE Registry No. 9813

PRODUCT: ALUMINUM "T" ASTRAGAL

PART OR ASSEMBLY: TYPICAL ELEVATIONS, DESIGN PRESSURES & GENERAL NOTES

NO.	DATE	REVISIONS	BY
4	6/26/24	ADD FLAT ASTRAGAL PROFILE	LFS
3	8/09/23	UPDATE TO 8TH ED. (2023) FBC	LFS
2	6/10/21	REVISE NEGATIVE D.P. SIGNAGE	LFS
1	9/03/20	UPDATE TO 7TH ED. (2020) FBC	LFS

DATE: 12/15/17
SCALE: N.T.S.
DWG. BY: JK
CHK. BY: LFS
DRAWING NO.: FL-13727.1
SHEET 1 OF 6

© 2017 R.W. BUILDING CONSULTANTS INC.

Z:\2023 FBC Drawings\AFCO\FL-13727 R10\FL-13727.1-2.dwg

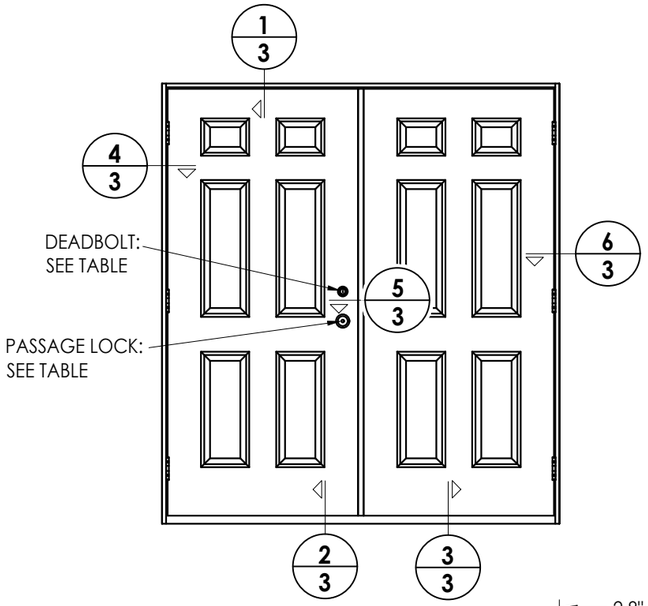

HARDWARE TABLE	
MANUFACTURER	MODEL
SCHLAGE	KNOB: "F" SERIES (F10) DEADBOLT: "B" SERIES (B60/62)

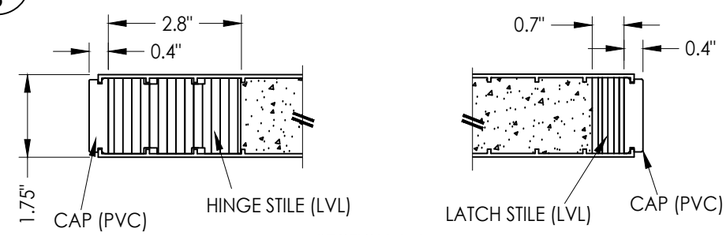

SECTION A-A

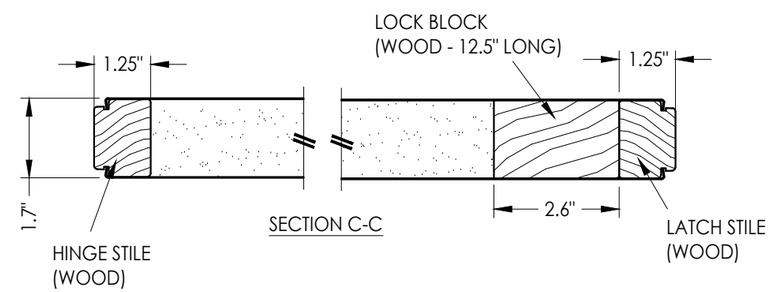

SECTION C-C

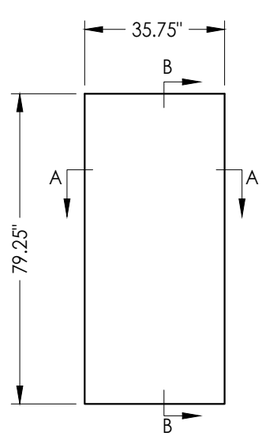

FIBERGLASS DOOR PANEL
Plastpro 6' 8"

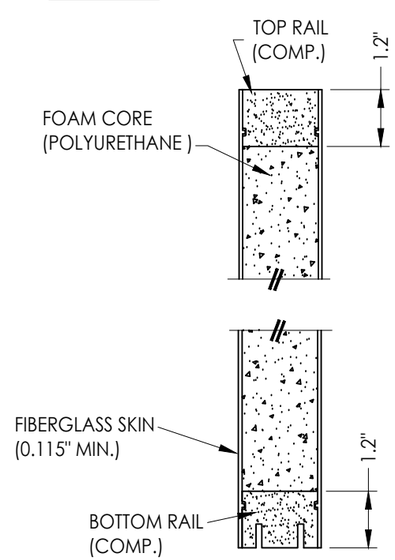

SECTION B-B

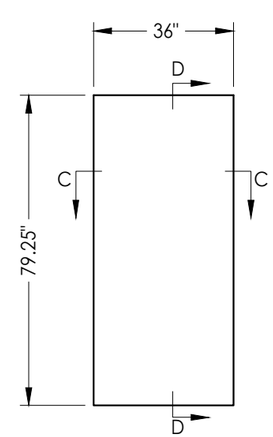

STEEL DOOR PANEL
Therma-Tru 6' 8"

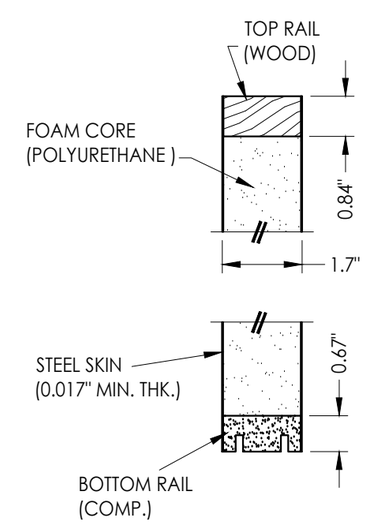

SECTION D-D

Documents Prepared By:
Lyndon F. Schmidt
P.E. No. 43409

RW BUILDING CONSULTANTS, INC.
P.O. Box 230, Valrico, FL 33595
Phone No.: 813.659.9197
FBPE Registry No. 9813

PRODUCT: ALUMINUM "T" ASTRAGAL

PART OR ASSEMBLY: DOOR PANEL DETAILS

REVISIONS

NO.	DATE		BY
4	6/26/24	ADD FLAT ASTRAGAL PROFILE	LFS
3	8/09/23	UPDATE TO 8TH ED. (2023) FBC	LFS
2	6/10/21	REVISE NEGATIVE D.P. SIGNAGE	LFS
1	9/03/20	UPDATE TO 7TH ED. (2020) FBC	LFS

DATE: 12/15/17
SCALE: N.T.S.
DWG. BY: JK
CHK. BY: LFS
DRAWING NO.: FL-13727.1
SHEET 2 OF 6

© 2017 R.W. Building Consultants Inc.

Z:\2023 FBC Drawings\AFCO\FL-13727 R10\FL-13727.1-2.dwg

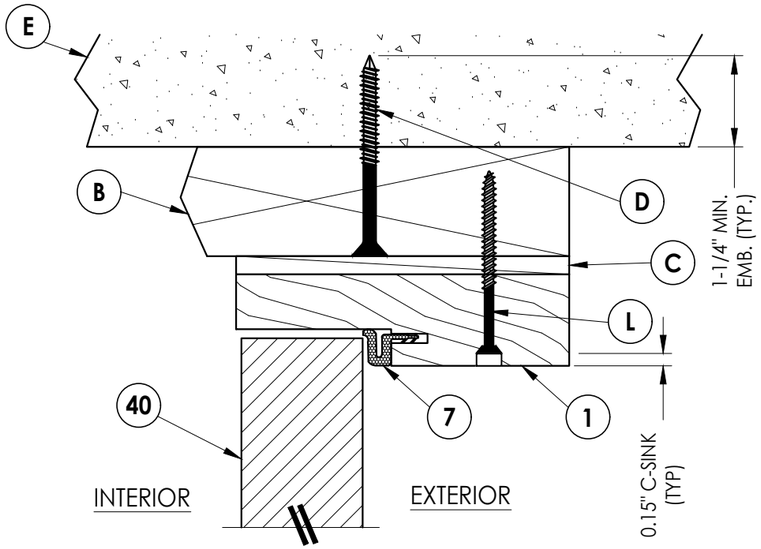

1/3 VERTICAL CROSS SECTION
Inswing shown
Outswing also approved

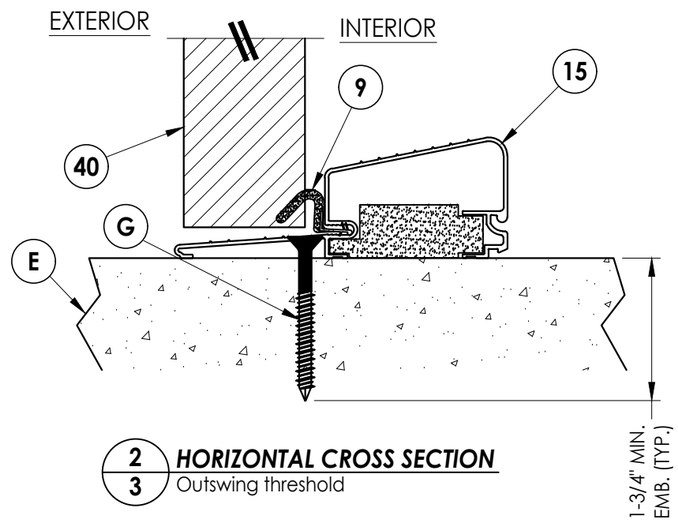

2/3 HORIZONTAL CROSS SECTION
Outswing threshold

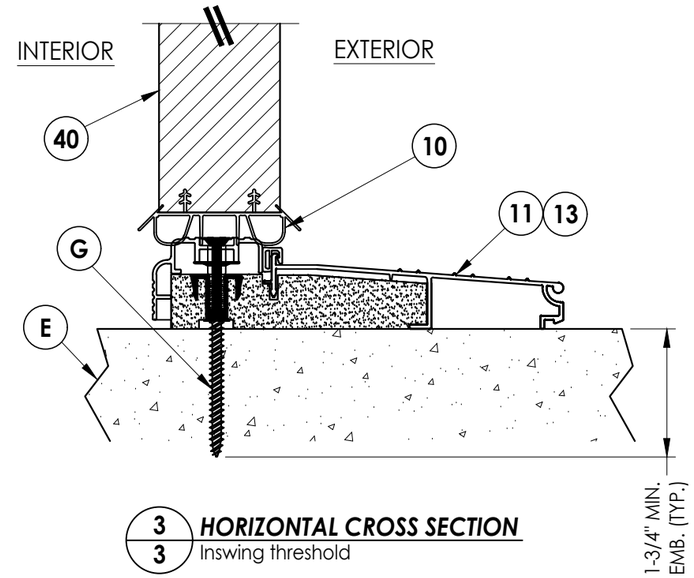

3/3 HORIZONTAL CROSS SECTION
Inswing threshold

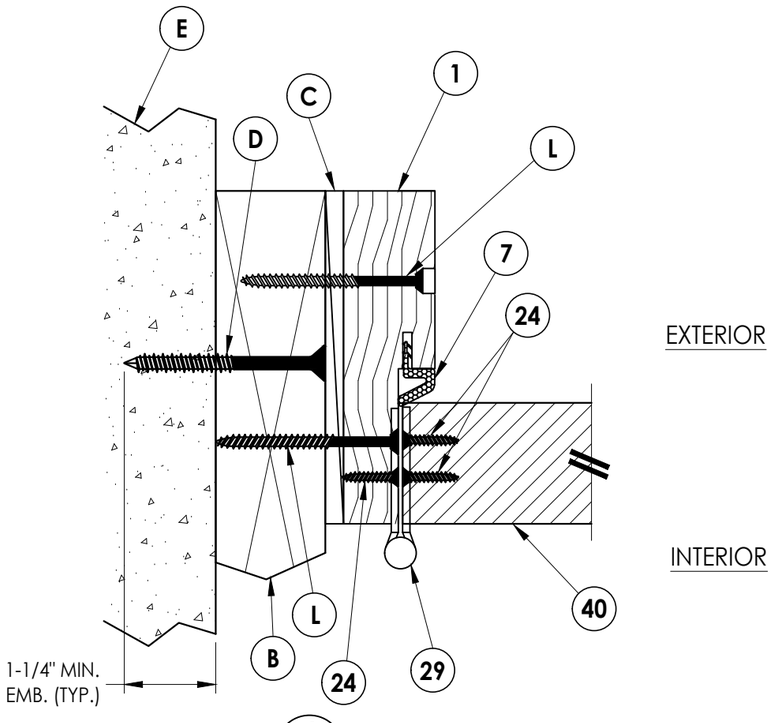

4/3 HORIZONTAL CROSS SECTION
Inswing shown
Outswing also approved

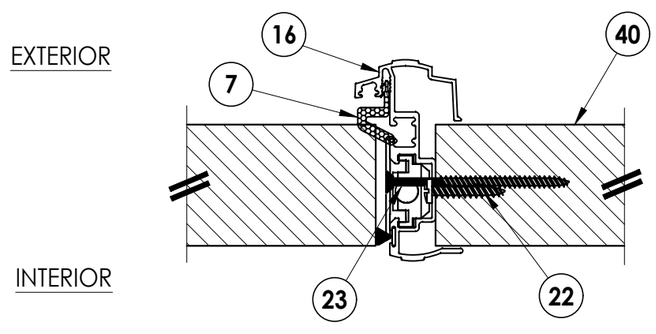

5/3 HORIZONTAL CROSS SECTION
Inswing shown
Outswing also approved

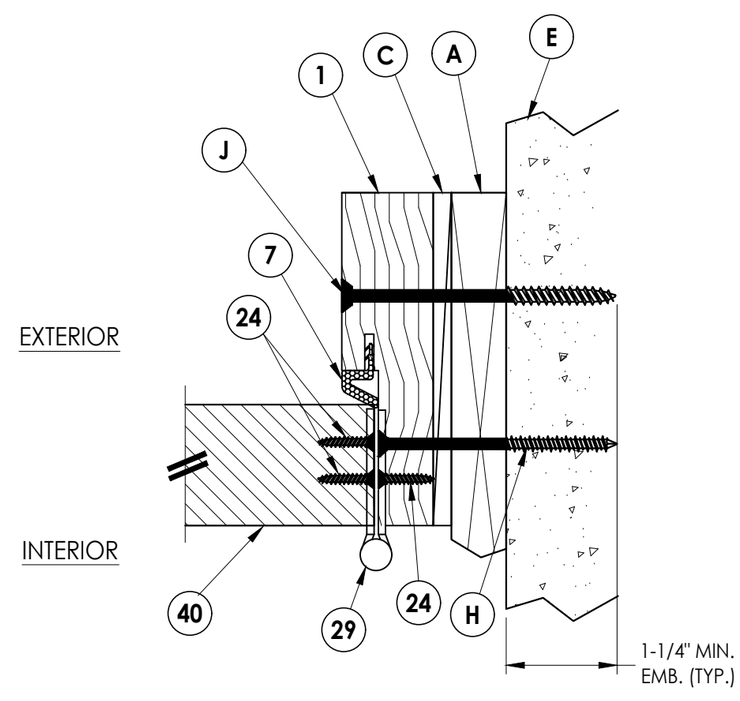

6/3 HORIZONTAL CROSS SECTION
Shown w/1X sub-buck

Documents Prepared By:
Lyndon F. Schmidt
P.E. No. 43409

RW BUILDING CONSULTANTS, INC.
P.O. Box 230, Valrico, FL 33595
Phone No.: 813.659.9197
FBPE Registry No. 9813

PRODUCT: ALUMINUM "T" ASTRAGAL

PART OR ASSEMBLY: HORIZONTAL AND VERTICAL CROSS SECTIONS

REVISIONS

NO.	DATE		BY
4	6/26/24	ADD FLAT ASTRAGAL PROFILE	LFS
3	8/09/23	UPDATE TO 8TH ED. (2023) FBC	LFS
2	6/10/21	REVISE NEGATIVE D.P. SIGNAGE	LFS
1	9/03/20	UPDATE TO 7TH ED. (2020) FBC	LFS

DATE: 12/15/17
SCALE: N.T.S.
DWG. BY: JK
CHK. BY: LFS
DRAWING NO.: FL-13727.1
SHEET 3 OF 6

© 2017 R.W. BUILDING CONSULTANTS INC.

Z:\2023 FBC Drawings\AFCO\FL-13727 R10\FL-13727.1-2.dwg

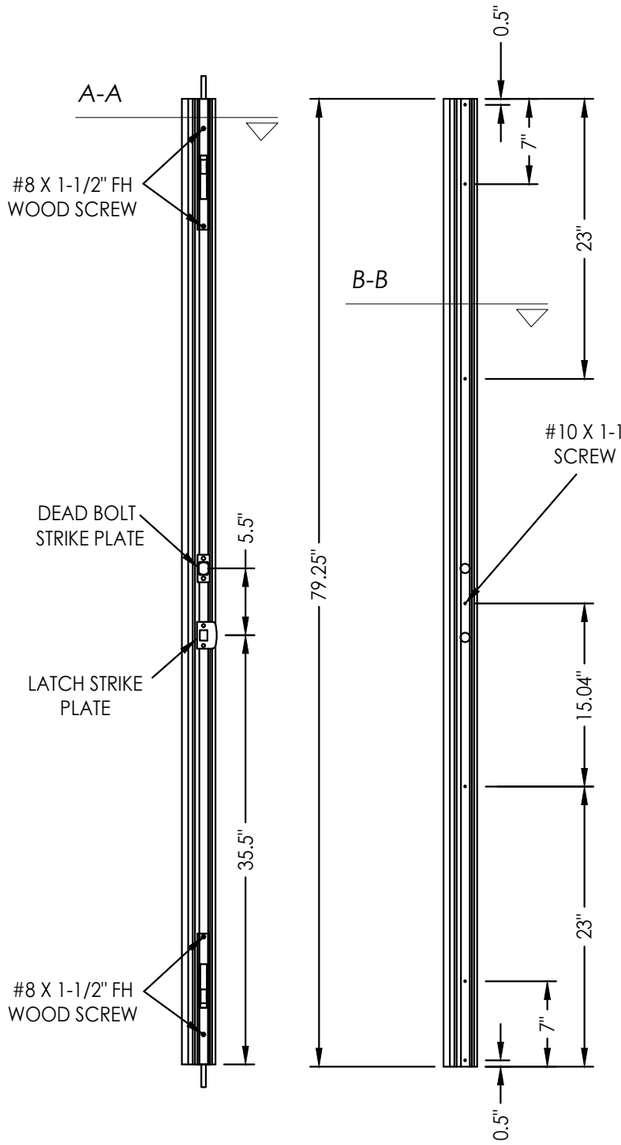

ASTRAGAL DETAILS

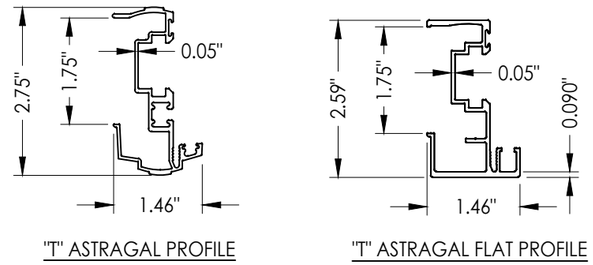

"T" ASTRAGAL PROFILE

"T" ASTRAGAL FLAT PROFILE

16 ***ALUMINUM "T" ASTRAGAL by AFCO***

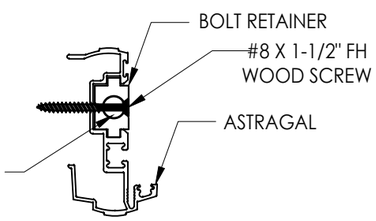

SECTION A-A
Astragal Assembly

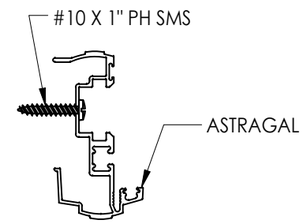

SECTION B-B
Astragal Assembly

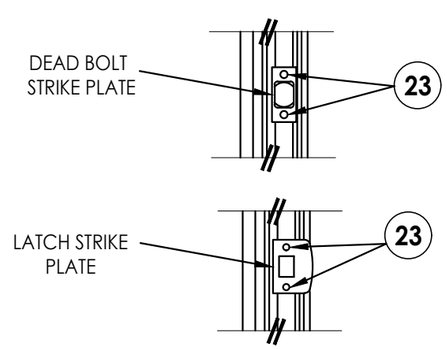

LATCH & DEAD BOLT DETAIL

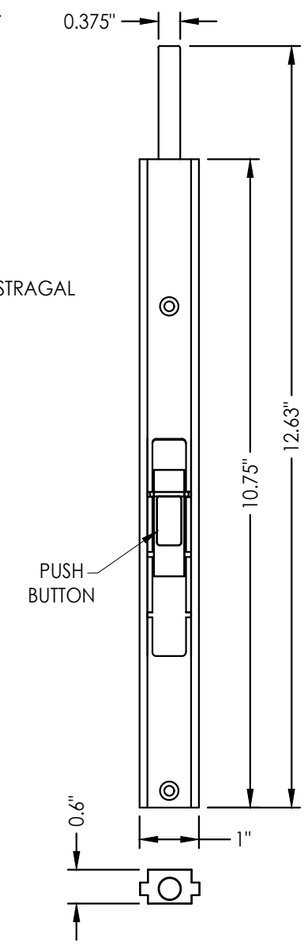

SLIDE BOLT ASSEMBLY
(w/ Push Button)
Aluminum

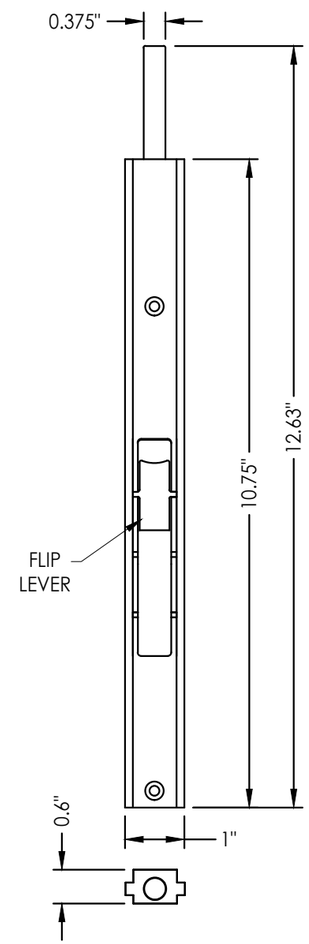

SLIDE BOLT ASSEMBLY
(w/ Flip Lever)
Aluminum

Documents Prepared By:
Lyndon F. Schmidt
P.E. No. 43409

RW BUILDING CONSULTANTS, INC.
P.O. Box 230, Valrico, FL 33595
Phone No.: 813.659.9197
FBPE Registry No. 9813

PRODUCT: *ALUMINUM "T" ASTRAGAL*

PART OR ASSEMBLY: *ASTRAGAL DETAILS*

NO.	DATE	REVISIONS	BY
4	6/26/24	ADD FLAT ASTRAGAL PROFILE	LFS
3	8/09/23	UPDATE TO 8TH ED. (2023) FBC	LFS
2	6/10/21	REVISE NEGATIVE D.P. SIGNAGE	LFS
1	9/03/20	UPDATE TO 7TH ED. (2020) FBC	LFS

DATE: 12/15/17
SCALE: N.T.S.
DWG. BY: JK
CHK. BY: LFS
DRAWING NO.: FL-13727.1
SHEET 4 OF 6

© 2017 R.W. Building Consultants Inc.

Z:\2023 FBC Drawings\AFCO\FL-13727 R10\FL-13727.1-2.dwg

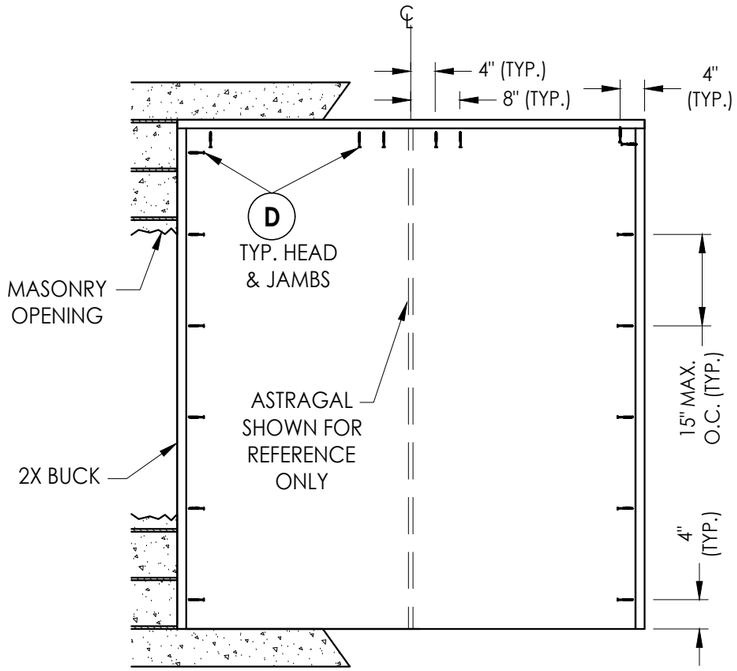

BUCK ANCHORING

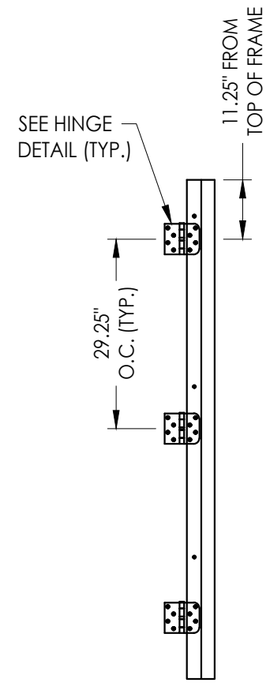

HINGE JAMB

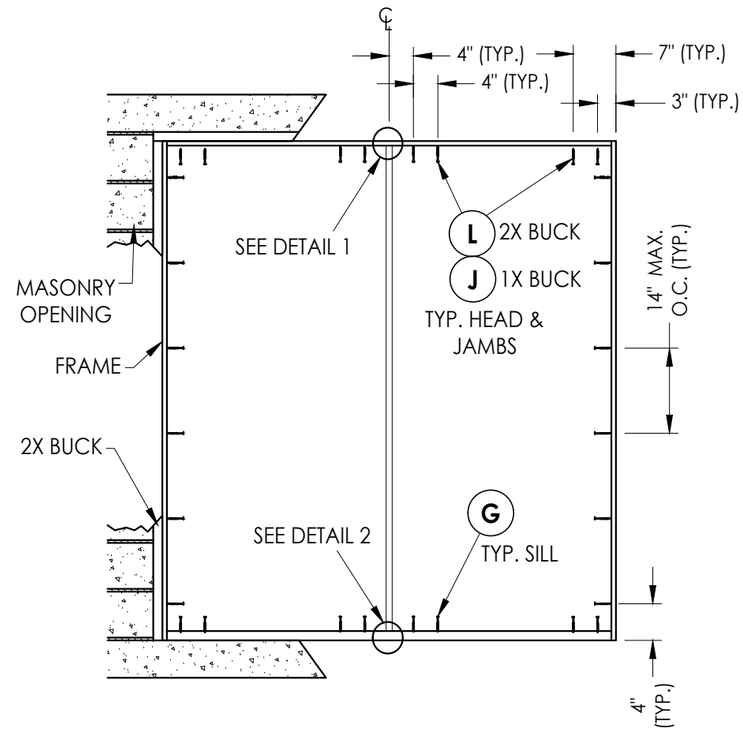

FRAME ANCHORING
Masonry construction

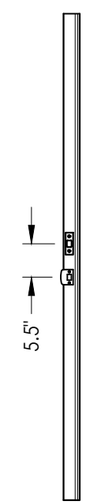

ASTRAGAL

CONCRETE ANCHOR NOTES:

1. *Concrete anchor locations at the corners may be adjusted to maintain the min. edge distance to mortar joints.*
2. *Concrete anchor locations noted as "MAX. ON CENTER" must be adjusted to maintain the min. edge distance to mortar joints, additional concrete anchors may be required to ensure the "MAX. ON CENTER" dimension are not exceeded.*
3. *Concrete anchor table:*

ANCHOR TYPE	ANCHOR SIZE	MIN. EMBEDMENT	MIN. CLEARANCE TO MASONRY EDGE	MIN. CLEARANCE TO ADJACENT ANCHOR
ITW TAPCON®	1/4"	1-1/4"	2"	4"
DeWALT ULTRACON®+	1/4"	1-1/4"	1"	4"
ITW TAPCON®	3/16"	1-1/4"	3"	1-1/2"

WOOD SCREW INSTALLATION NOTES:

1. *Maintain a minimum 5/8" edge distance, 1" end distance, & 1" o.c. spacing of wood screws to prevent the splitting of wood.*

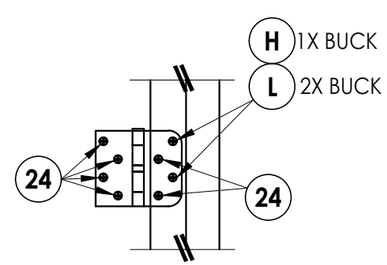

HINGE DETAIL

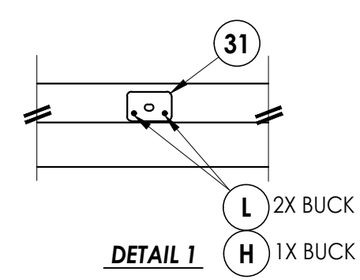

DETAIL 1

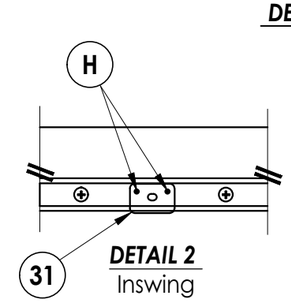

DETAIL 2
Inswing

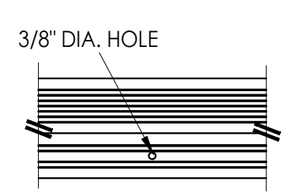

DETAIL 2
Outswing

Documents Prepared By:
Lyndon F. Schmidt
P.E. No. 43409

RW BUILDING CONSULTANTS, INC.
P.O. Box 230, Valrico, FL 33595
Phone No.: 813.659.9197
FBPE Registry No. 9813

PRODUCT: *ALUMINUM "T" ASTRAGAL*

PART OR ASSEMBLY: *BUCK & FRAME ANCHORING*

REVISIONS

NO.	DATE	BY
4	6/26/24 ADD FLAT ASTRAGAL PROFILE	LFS
3	8/09/23 UPDATE TO 8TH ED. (2023) FBC	LFS
2	6/10/21 REVISE NEGATIVE D.P. SIGNAGE	LFS
1	9/03/20 UPDATE TO 7TH ED. (2020) FBC	LFS

DATE: 12/15/17
SCALE: N.T.S.
DWG. BY: JK
CHK. BY: LFS
DRAWING NO.: FL-13727.1
SHEET 5 OF 6

© 2017 R.W. Building Consultants Inc.

Z:\2023 FBC Drawings\AFCO\FL-13727 R10\FL-13727.1-2.dwg

BILL OF MATERIALS

ITEM #	DESCRIPTION	MATERIAL
A	1X BUCK SG >= 0.55	WOOD
B	2X BUCK SG >= 0.55	WOOD
C	1/4" MAX. SHIM SPACE	-
D	1/4" X 2-3/4" PFH DeWALT OR ITW CONCRETE SCREW	STEEL
E	MASONRY - 3,000 PSI MIN. CONCRETE CONFORMING TO ACI 301 OR HOLLOW BLOCK CONFORMING TO ASTM C90	CONCRETE
G	1/4" PFH DeWALT OR ITW CONCRETE SCREW (1-3/4" MIN. EMBEDMENT)	STEEL
H	3/16" X 3-1/4" PFH ITW CONCRETE SCREW	STEEL
J	1/4" X 3-3/4" PFH DeWALT OR ITW CONCRETE SCREW	STEEL
L	#10 X 2-1/2" PFH WOOD SCREW (1.15" MIN. EMBEDMENT)	STEEL
1	HEAD AND JAMB (SG=> 0.42)	WOOD
7	WEATHER STRIP QEBD650 Q-LON	FOAM
10	DOOR BOTTOM SWEEP	PVC
11	INSWING THRESHOLD	ALUM/COMP
12	DEAD BOLT STRIKE PLATE	STEEL
13	INSWING THRESHOLD	ALUM/COMP
14	LATCH STRIKE PLATE	STEEL
15	OUTSWING THRESHOLD	ALUM/COMP
16	ASTRAGAL BY AFCO	ALUM
22	#10 X 1" PH SMS	STEEL
23	#8 X 2-1/2" PPH WS	STEEL
24	#10 X 1" PFH SMS	STEEL
29	4" X 4" HINGE	STEEL
31	ASTRAGAL STRIKE PLATE	STEEL
40	THERMA-TRU DOOR PANEL (STEEL)	-

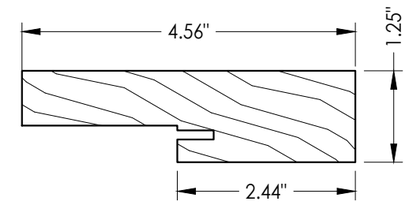

1 **HEAD & SIDE JAMB**

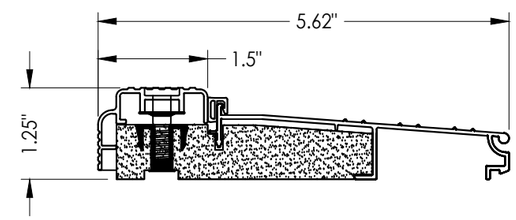

11 **INSWING THRESHOLD**
AFCO A-280

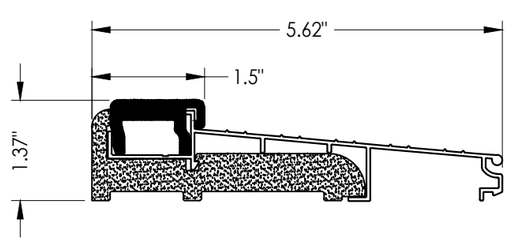

13 **INSWING THRESHOLD**
AFCO IXO

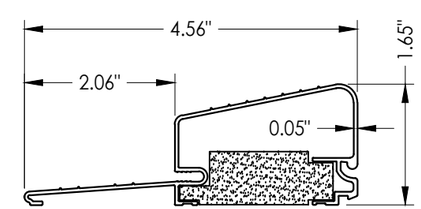

15 **OUTSWING THRESHOLD**
AFCO H-497

Documents Prepared By:
Lyndon F. Schmidt
P.E. No. 43409

BUILDING CONSULTANTS, INC.
P.O. Box 230, Valrico, FL 33595
Phone No.: 813.659.9197
FBPE Registry No. 9813

PRODUCT: ALUMINUM "T" ASTRAGAL

PART OR ASSEMBLY: BILL OF MATERIALS & COMPONENTS

NO.	DATE	REVISIONS	BY
4	6/26/24	ADD FLAT ASTRAGAL PROFILE	LFS
3	8/09/23	UPDATE TO 8TH ED. (2023) FBC	LFS
2	6/10/21	REVISE NEGATIVE D.P. SIGNAGE	LFS
1	9/03/20	UPDATE TO 7TH ED. (2020) FBC	LFS

DATE: 12/15/17
SCALE: N.T.S.
DWG. BY: JK
CHK. BY: LFS
DRAWING NO.: FL-13727.1
SHEET 6 OF 6

© 2017 R.W. BUILDING CONSULTANTS INC.

Z:\2023 FBC Drawings\AFCO\FL-13727 R10\FL-13727.1-2.dwg